SECTION 3-C
CURB INLETS

CITY OF SACHSE, TEXAS DEPARTMENT OF ENGINEERING		
STANDARD CONSTRUCTION DETAILS STORM WATER		
CURB INLETS		
APPROVED:		
DATE: SEPTEMBER 2013	REVISED:	Page 1

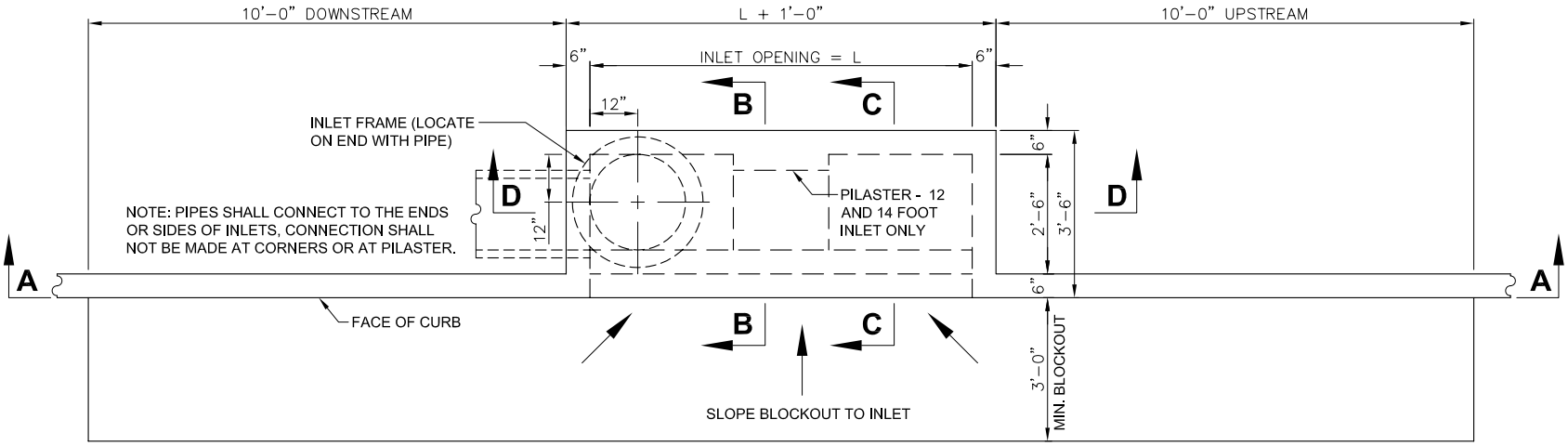

PLAN - STANDARD INLET

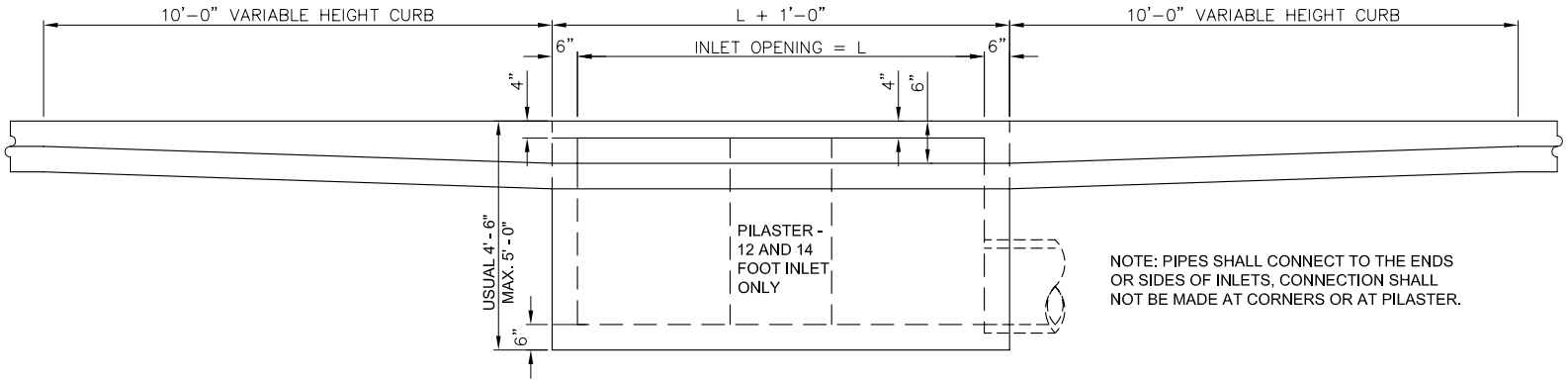

SECTION A-A FOR STANDARD INLETS

CITY OF SACHSE, TEXAS DEPARTMENT OF ENGINEERING		
STANDARD CONSTRUCTION DETAILS STORM WATER		
CURB INLETS		
APPROVED:		
DATE: SEPTEMBER 2013	REVISED:	Page 2

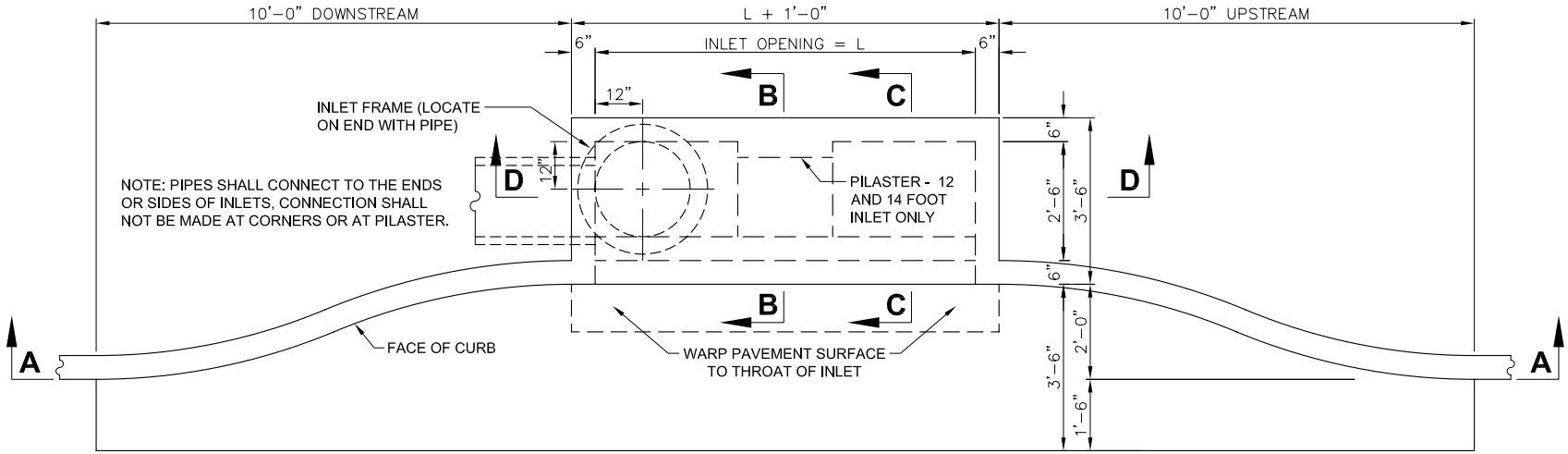

PLAN - RECESSED INLET

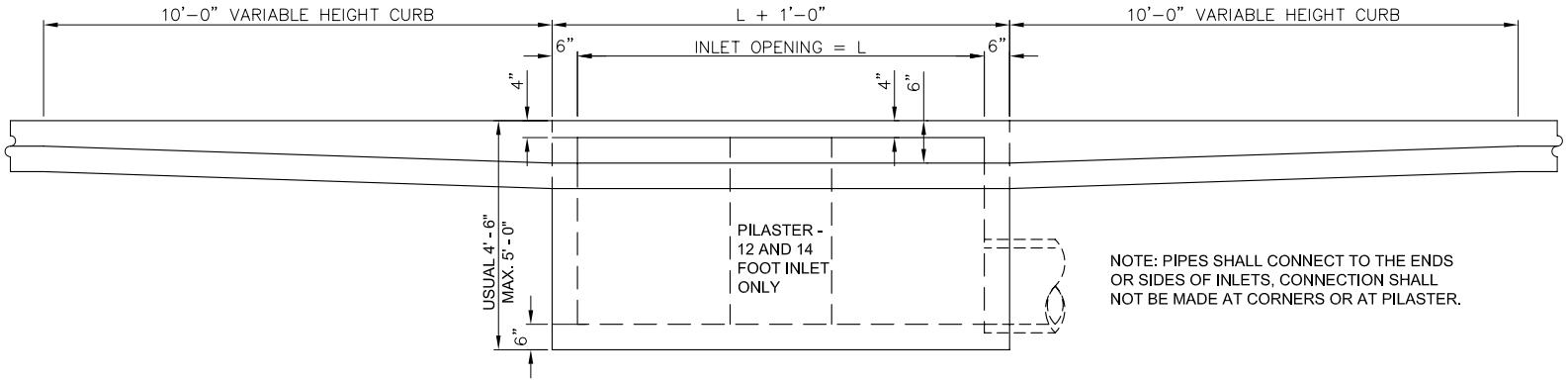

SECTION A-A FOR STANDARD INLETS

CITY OF SACHSE, TEXAS DEPARTMENT OF ENGINEERING		
STANDARD CONSTRUCTION DETAILS STORM WATER		
CURB INLETS		
APPROVED:		
DATE: SEPTEMBER 2013	REVISED:	Page 3

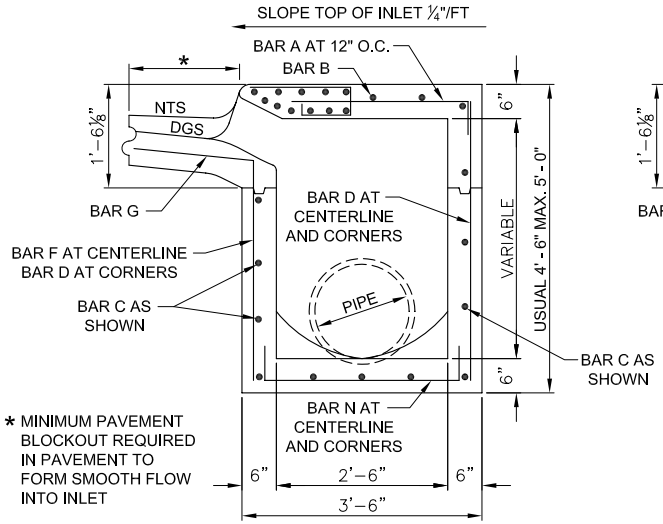

SECTION B-B

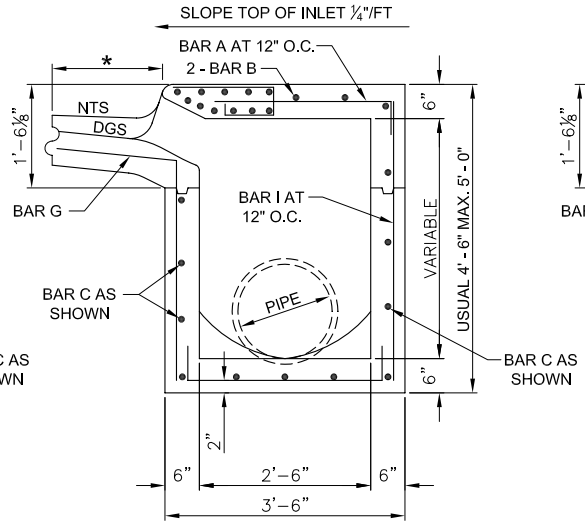

SECTION C-C

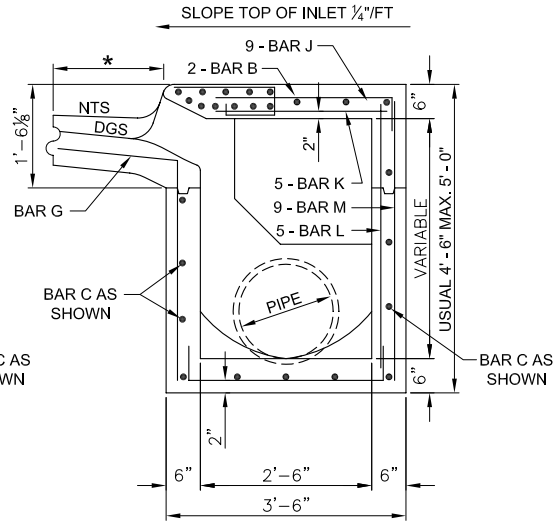

SECTION B-B FOR 12' & 14' ONLY

NTS = NORMAL TRANSVERSE SLOPE
DGS = DEPRESSED GUTTER SLOPE

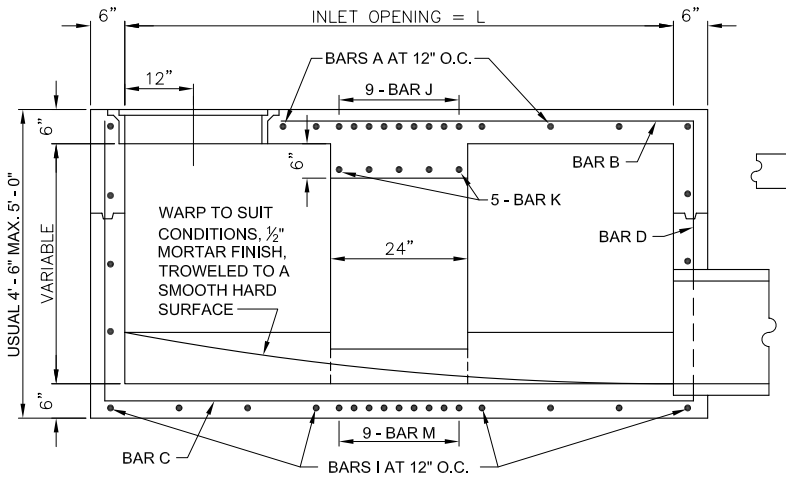

SECTION D-D FOR 12' & 14' ONLY

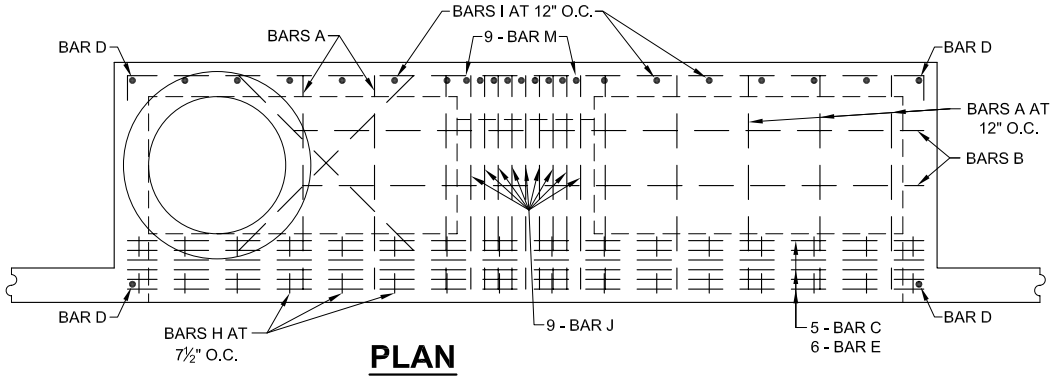

PLAN

CITY OF SACHSE, TEXAS DEPARTMENT OF ENGINEERING		
STANDARD CONSTRUCTION DETAILS STORM WATER		
CURB INLETS		
APPROVED:		
DATE: SEPTEMBER 2013	REVISED:	Page 4

INLET LENGTH	BAR TYPE	BAR DIA (⅛ IN)	NO. REQ'D	BAR DIMENSIONS		
				A	B	C
4	A	3	6	3'-2"	0'-3"	-
	B	3	1	2'-10"	-	-
	C	4	15	4'-8"	0'-6"	-
	D	4	5	4'-8"	-	-
	F	4	1	3'-2"	-	-
	G	3	5	2'-0"	1'-3"	-
	H	3	3	*	*	*
	N	3	3	3'-2"	3'-2"	3'-2"
6	A	3	9	3'-2"	0'-3"	-
	B	3	1	4'-10"	-	-
	C	4	15	6'-8"	0'-6"	-
	D	4	5	4'-8"	-	-
	F	4	1	3'-2"	-	-
	G	3	5	2'-0"	1'-3"	-
	H	3	3	*	*	*
	N	3	3	3'-2"	3'-2"	3'-2"
8	A	3	12	3'-2"	0'-3"	-
	B	3	1	6'-10"	-	-
	C	4	15	8'-8"	0'-6"	-
	D	4	5	4'-8"	-	-
	F	4	1	3'-2"	-	-
	G	3	5	2'-0"	1'-3"	-
	H	3	4	*	*	*
	N	3	3	3'-2"	3'-2"	3'-2"
10	A	3	10	3'-2"	0'-3"	-
	B	3	2	8'-10"	-	-
	C	4	16	10'-8"	0'-6"	-
	D	4	4	4'-8"	-	-
	E	5	6	10'-8"	-	-
	G	3	5	2'-0"	1'-3"	-
	H	3	15	*	*	*
	I	4	6	4'-8"	3'-2"	3'-2"
	L	4	5	4'-3"	-	-
12	A	3	12	3'-2"	0'-3"	-
	B	3	2	10'-10"	-	-
	C	4	16	12'-8"	0'-6"	-
	D	4	4	4'-8"	-	-
	E	5	6	12'-8"	-	-
	G	3	5	2'-0"	1'-3"	-
	H	3	18	*	*	*
	I	4	10	4'-8"	3'-2"	3'-2"
	J	5	9	3'-2"	1'-3"	-
	K	4	5	2'-3"	-	-
	L	4	5	4'-3"	-	-
	M	5	9	4'-3"	3'-2"	3'-9"
14	A	3	14	3'-2"	0'-3"	-
	B	3	2	10'-10"	-	-
	C	4	18	14'-8"	0'-6"	-
	D	4	4	4'-8"	-	-
	E	5	6	14'-8"	-	-
	G	3	5	2'-0"	1'-3"	-
	H	3	21	*	*	*
	I	4	12	4'-8"	3'-2"	3'-2"
	J	5	9	3'-2"	1'-3"	-
	K	4	5	2'-3"	-	-
	L	4	5	4'-3"	-	-
	M	5	9	4'-3"	3'-2"	3'-9"

REINFORCING STEEL SCHEDULE

DIMENSIONS SHOWN ARE FOR MAXIMUM SIZE INLETS

* SEE DIAGRAM FOR DIMENSIONS

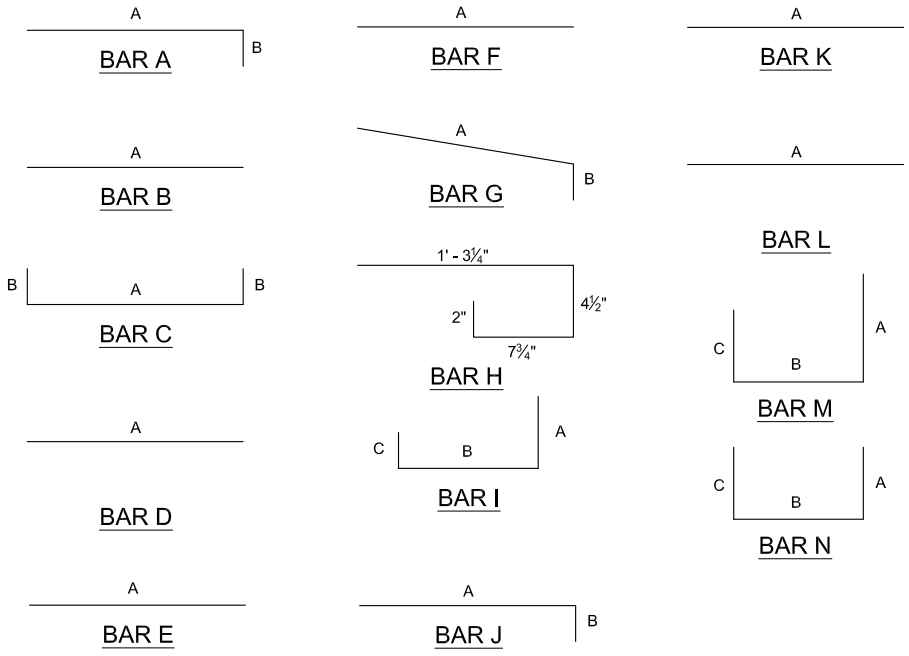

BAR DIAGRAMS

CITY OF SACHSE, TEXAS
DEPARTMENT OF ENGINEERING

STANDARD CONSTRUCTION DETAILS
STORM WATER

CURB INLETS

APPROVED:

DATE: SEPTEMBER 2013 | REVISED: | Page 5

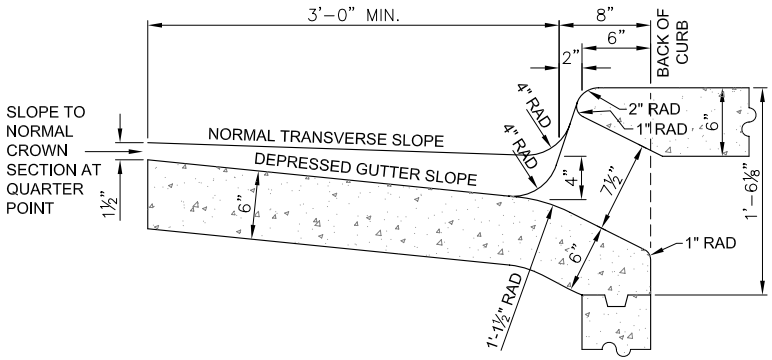

INLET THROAT DETAIL MINIMUM SECTION

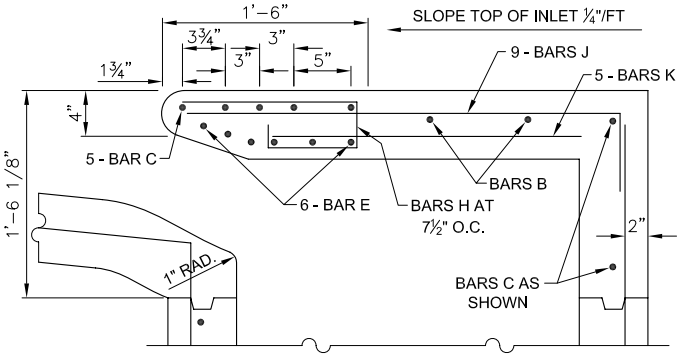

SECTION B-B FOR 12' & 14' ONLY

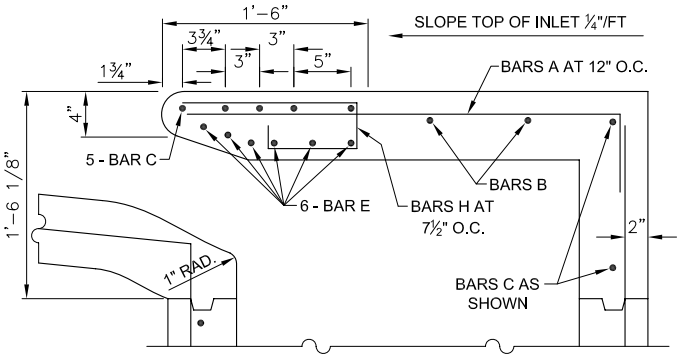

SECTION C-C FOR 12' & 14' ONLY

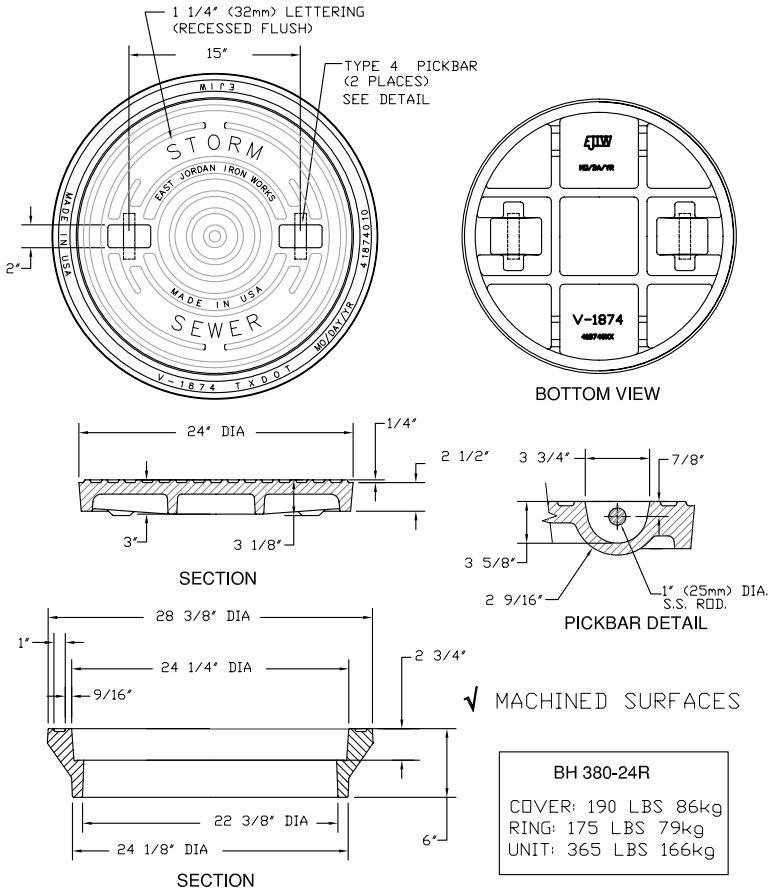

√ MACHINED SURFACES

BH 380-24R

COVER: 190 LBS 86kg
RING: 175 LBS 79kg
UNIT: 365 LBS 166kg

INLET FRAME AND COVER

CITY OF SACHSE, TEXAS DEPARTMENT OF ENGINEERING		
STANDARD CONSTRUCTION DETAILS STORM WATER		
CURB INLETS		
APPROVED:		
DATE: SEPTEMBER 2013	REVISED:	Page 6

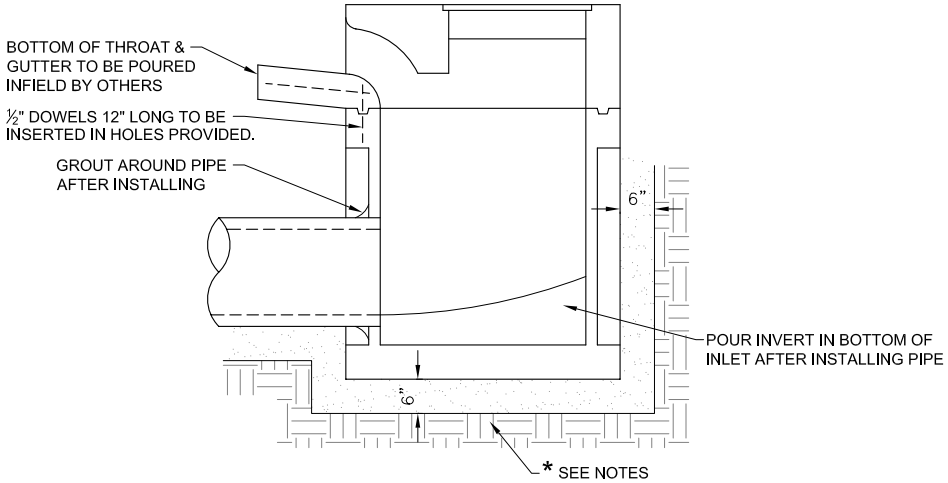

INSTALLATION DRAWING FOR PRECAST 5' & 10' CURB INLETS

Notes:

1 The floor of the excavation must provide a firm, level bed for the base section to rest upon.

2 A minimum of 6" of 1" diameter (maximum) rock or gravel shall be used to prepare the bedding to final grade or in lieu of this that at least 6" of 2 sack cement stabilized sand be used to prepare the bedding to grade. Cement stabilized sand to be allowed to set by keeping hole pumped dry.

3 After casting has been installed on the proper bedding, the backfill material, which is free flowing and clear of rocks in excess of 4" diameter and other lumps which would prohibit proper compaction, shall be commenced in lifts of no more than 18". The material used for backfill should be of a type suitable to obtain the density requirements for the specific job.

CITY OF SACHSE, TEXAS DEPARTMENT OF ENGINEERING		
STANDARD CONSTRUCTION DETAILS STORM WATER		
CURB INLETS		
APPROVED:		
DATE: SEPTEMBER 2013	REVISED:	Page 7