SECTION 2-C
SIDEWALKS & BARRIER FREE RAMPS

CITY OF SACHSE, TEXAS DEPARTMENT OF ENGINEERING		
STANDARD CONSTRUCTION DETAILS PAVING		
SIDEWALKS & BARRIER FREE RAMP		
APPROVED:		
DATE: SEPTEMBER 2013	REVISED:	Page 1

GENERAL NOTES

CURB RAMPS

1. Install a curb ramp or blended transition at each pedestrian street crossing.

2. All slopes shown are maximum allowable. Lesser slopes that will still drain properly should be used. Adjust curb ramp length or grade of approach sidewalks as directed.

3. The minimum residential sidewalk width is 4', sidewalks along thorough fares to be a minnimum of 5'. Where the sidewalk is adjacent to the back of curb, a 6' sidewalk width is desirable. Where a 4' sidewalk cannot be provided due to site constraints, sidewalk width may be reduced to 3' for short distances. 5'x 5' passing areas at intervals not to exceed 200' are required.

4. Landings shall be 5'x 5' minimum with a maximum 2% slope in any direction.

5. Maneuvering space at the bottom of curb ramps shall be a minimum of 4'x 4' wholly contained within the crosswalk and wholly outside the parallel vehicular travel path.

6. Maximum allowable cross slope on sidewalk and curb ramp surfaces is 2%.

7. Provide flared sides where the pedestrian circulation path crosses the curb ramp. Flared sides shall be sloped at 10% maximum, measured parallel to the curb. Returned curbs may be used only where pedestrians would not normally walk across the ramp, either because the adjacent surface is planted, substantially obstructed, or otherwise protected.

8. Additional information on curb ramp location, design, light reflective value and texture may be found in the current edition of the Texas Accessibility Standards (TAS) and 16 TAC 68.102.

9. To serve as a pedestrian refuge area, the median should be a minimum of 6' wide, measured from back of curbs. Medians should be designed to provide accessible passage over or through them.

10. Small channelization islands, which do not provide a minimum 5'x 5' landing at the top of curb ramps, shall be cut through level with the surface of the street.

11. Crosswalk dimensions, crosswalk markings and stop bar locations shall be as shown elsewhere in the plans. At intersections where crosswalk markings are not required, curb ramps shall align with theoretical crosswalks unless otherwise directed.

12. Handrails are not required on curb ramps. Provide curb ramps wherever on accessible route crosses (penetrates) a curb.

13. Place concrete at a minimum depth of 5" for ramps, flares and landings, unless otherwise directed.

14. Provide a smooth transition where the curb ramps connect to the street.

15. Existing features that comply with TAS may remain in place unless otherwise shown on the plans.

DETECTABLE WARNING MATERIAL

16. Curb ramps must contain a detectable warning surface that consists of raised truncated domes complying with Section 705 of the TAS. The surface must contrast visually with adjoining surfaces, including side flares. Furnish and install an approved cast-in-place dark red detectable warning surface material or brick pavers adjacent to uncolored concrete, unless specified elsewhere in the plans.

17. Detectable Warning Materials must meet TxDOT Departmental Materials Specification DMS 4350 and be listed on the Material Producer List. Install products in accordance with manufacturer's specifications.

18. Detectable warning surfaces must be slip resistant and not allow water to accumulate.

19. Detectable warning surfaces shall be a minimum of 24" in depth in the direction of pedestrian travel, and extend the full width of the curb ramp or landing where the pedestrian access route enters the street.

20. Detectable warning surfaces shall be located so that the edge nearest the curb line is at the back of curb. Align the rows of domes to be perpendicular to the grade break between the ramp run and the street. Detectable warning surfaces may be curved along the corner radius.

DETECTABLE WARNING PAVERS

21. Furnish detectable warning paver units meeting all requirements of ASTM C-936, C-33. Lay in a two by two unit basket weave pattern or as directed.

22. Lay full-size units first followed by closure units consisting of at least 25 percent of a full unit. Cut detectable warning paver units using a power saw.

CITY OF SACHSE, TEXAS DEPARTMENT OF ENGINEERING		
STANDARD CONSTRUCTION DETAILS PAVING		
BARRIER FREE RAMP GENERAL NOTES		
APPROVED:		
DATE: SEPTEMBER 2013	REVISED:	Page 2

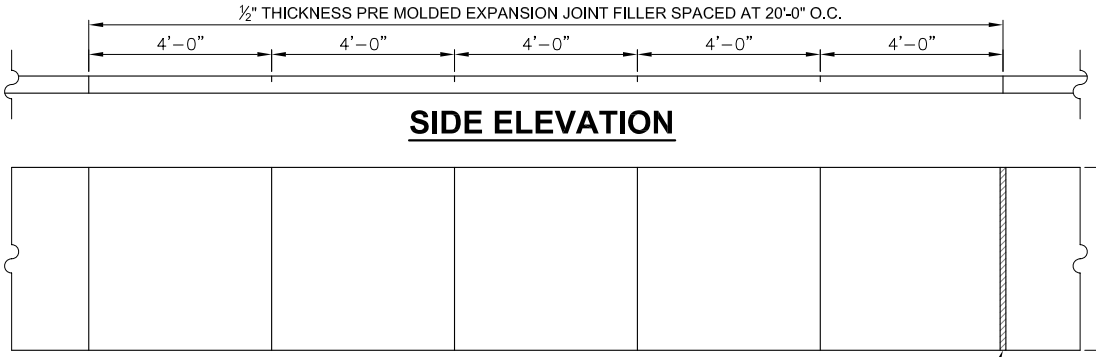

SIDE ELEVATION

PLAN

½" EXPANSION JOINTS SHALL BE SPACED AT 20' INTERVALS OR AS OTHERWISE SPECIFIED AND JOINTS SHALL BE FILLED WITH PRE MOLDED BITUMINOUS EXPANSION JOINT FILLER.

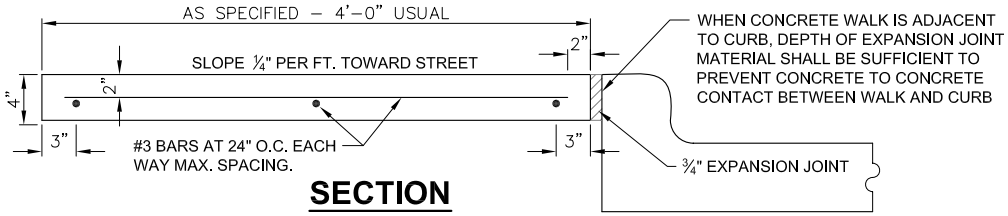

SECTION

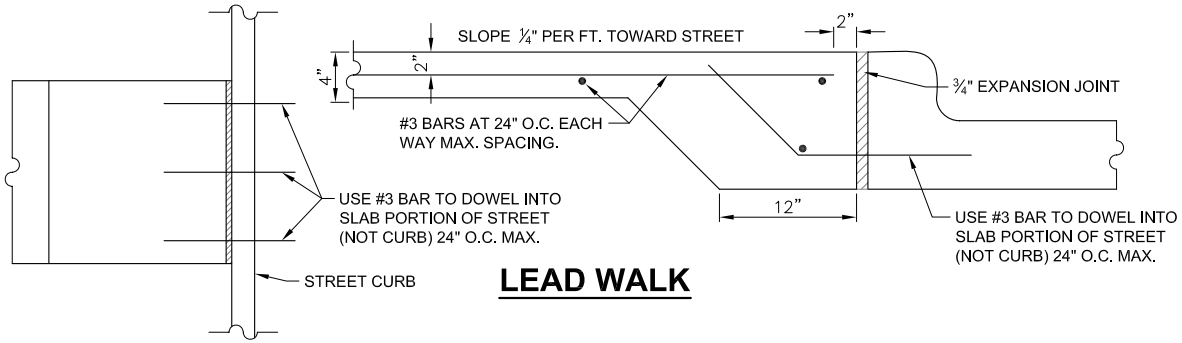

LEAD WALK

CONCRETE SIDEWALK

NOTES:

1. SELECT MATERIAL (EXC. SAND) MAY BE PLACED UNDER CONCRETE SIDEWALK FOR GRADING PURPOSES TO ACHIEVE A UNIFORM SURFACE OR SUBGRADE UPON WHICH TO PLACE CONCRETE.
2. ALL SUBGRADE BENEATH SIDEWALKS TO BE COMPACTED TO 95% STANDARD PROCTOR DENSITY.
3. ALL SIDEWALKS TO BE CONSTRUCTED IN ACCORDANCE WITH TEXAS ACCESSIBILITY STANDARDS (TAS).
4. STANDARD 4' WIDE CONCRETE SIDEWALK SHALL BE CONSTRUCTED WITH A ONE (1) FOOT SPACE BETWEEN THE PROPERTY R.O.W. LINE AND THE EDGE OF THE SIDEWALK.

CITY OF SACHSE, TEXAS DEPARTMENT OF ENGINEERING		
STANDARD CONSTRUCTION DETAILS PAVING		
SIDEWALKS		
APPROVED:		
DATE: SEPTEMBER 2013	REVISED:	Page 3

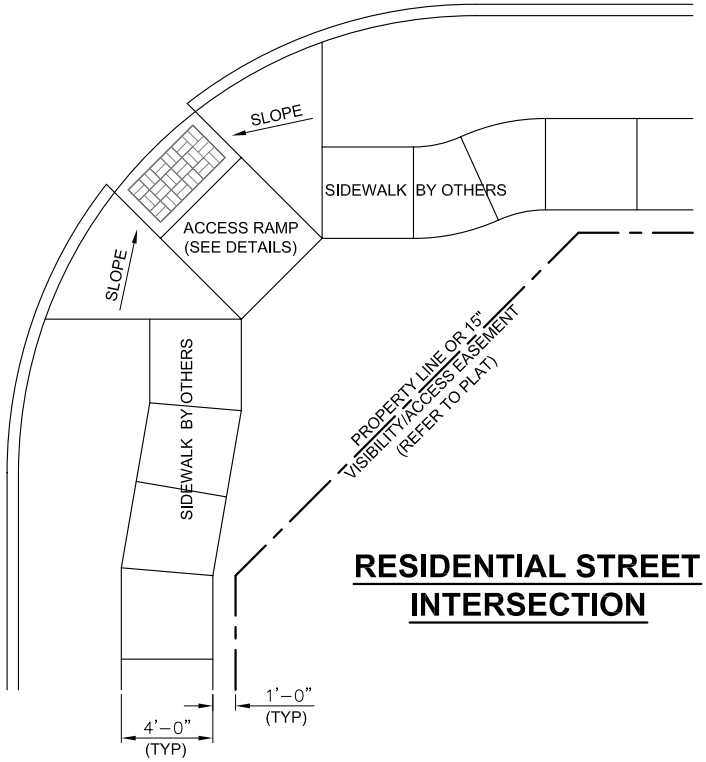

RESIDENTIAL STREET INTERSECTION

STANDARD 4' WIDE CONCRETE SIDEWALK SHALL BE CONSTRUCTED WITH A ONE (1) FOOT SPACE BETWEEN THE PROPERTY R.O.W. LINE AND THE EDGE OF THE SIDEWALK.

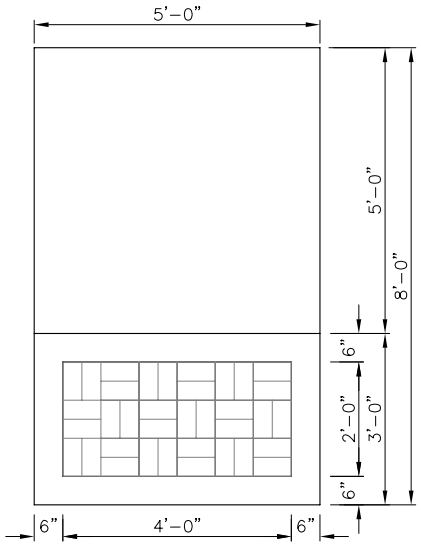

BRICK PAVER AREA TEXTURE DETAIL

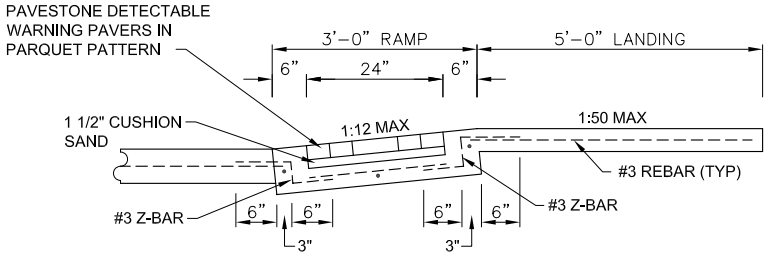

BRICK PAVER AREA SECTION

BRICK PAVERS SHALL BE PAVESTONE ADA COMPLIANT DETECTABLE (PRODUCT 200) IN ANTIQUE RED, CONSTRUCTED IN A PARQUET PATTERN. PAVERS SHALL BE INSTALLED IN ACCORDANCE WITH PAVESTONE'S INSTALLATION PROCEDURES. (OR APPROVED EQUAL)

CITY OF SACHSE, TEXAS DEPARTMENT OF ENGINEERING		
STANDARD CONSTRUCTION DETAILS PAVING		
TYPICAL CROSSING LAYOUTS		
APPROVED:		
DATE: SEPTEMBER 2013	REVISED:	Page 4

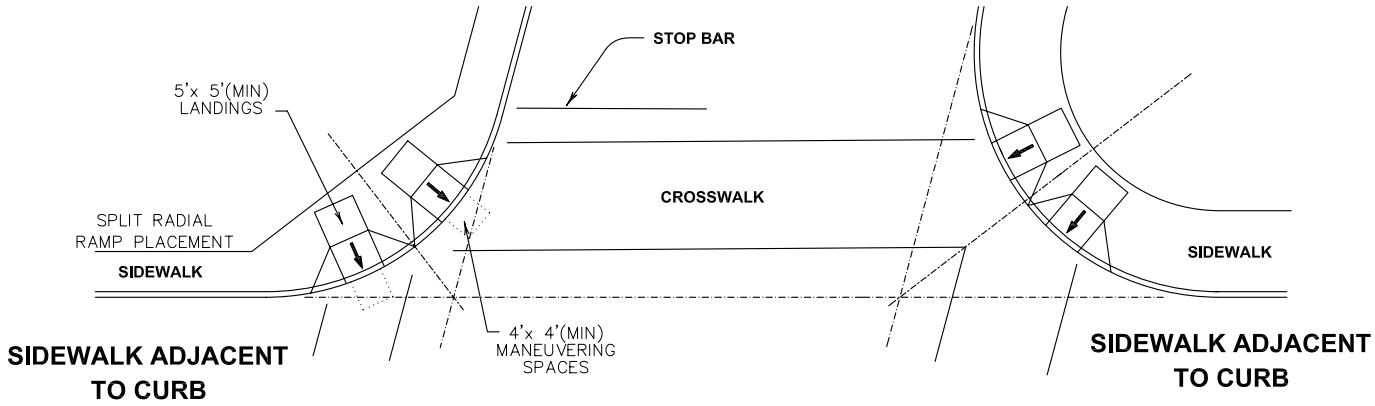

SKEWED INTERSECTION WITH "LARGE" RADIUS

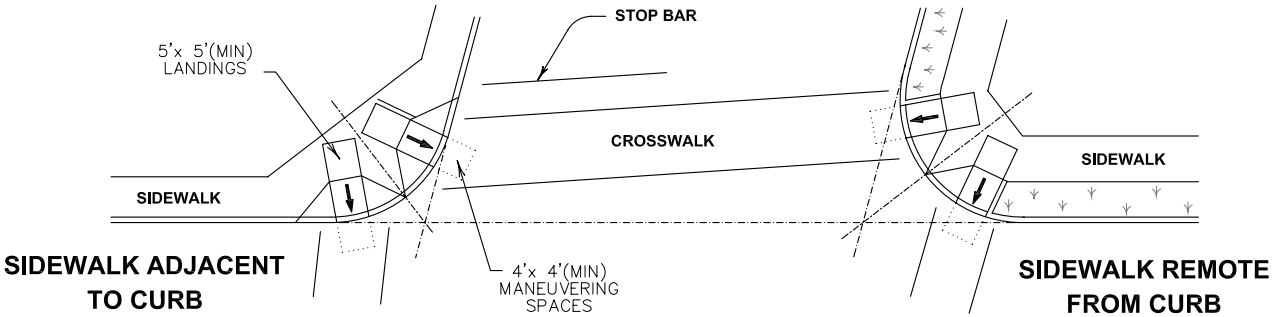

SKEWED INTERSECTION WITH "SMALL" RADIUS

NOTES / LEGEND:

See General Notes on sheet 2 of 4 for more information.

Denotes planting or non-walking surface not part of pedestrian circulation path.

------- Ramp Limits of Payment

Detectable Warning Surface

CITY OF SACHSE, TEXAS DEPARTMENT OF ENGINEERING		
STANDARD CONSTRUCTION DETAILS PAVING		
TYPICAL CROSSING LAYOUTS		
APPROVED:		
DATE: SEPTEMBER 2013	REVISED:	Page 5

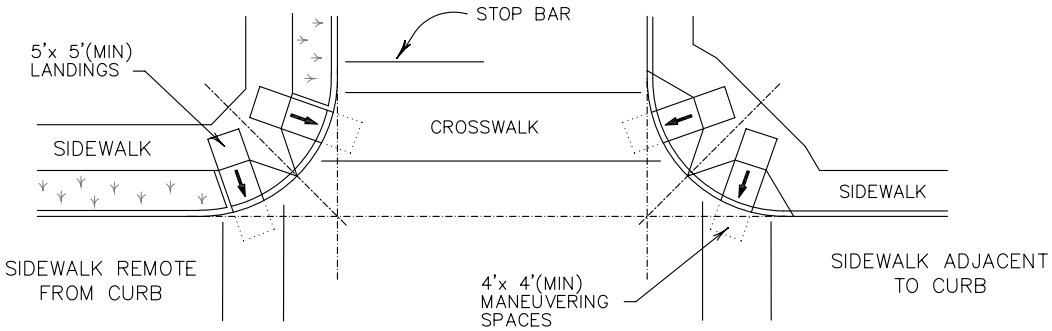

NORMAL INTERSECTION WITH "SMALL" RADIUS

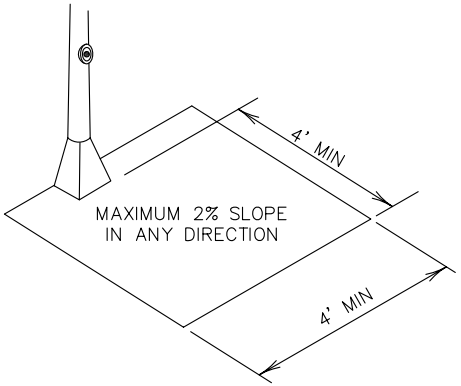

CLEAR GROUND SPACE ADJACENT TO PEDESTRIAN PUSH BUTTON

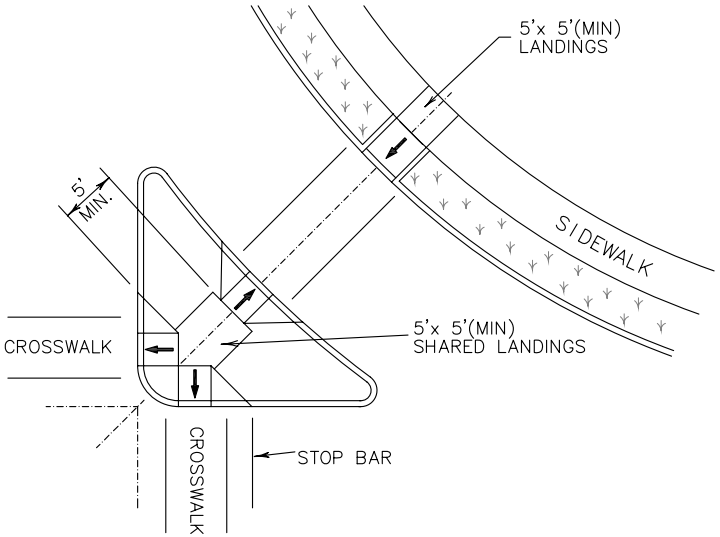

AT INTERSECTION W/FREE RIGHT TURN & ISLAND

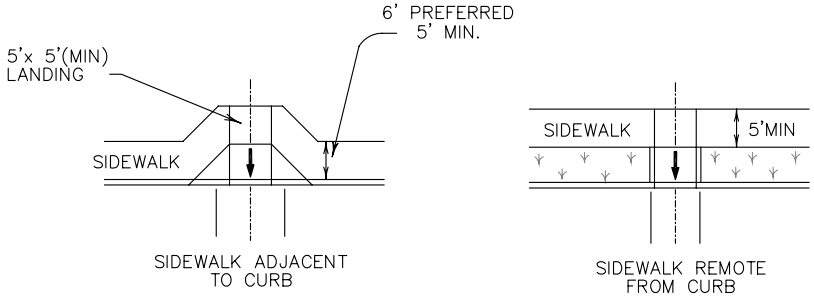

MID-BLOCK PLACEMENT PERPENDICULAR RAMPS

CITY OF SACHSE, TEXAS DEPARTMENT OF ENGINEERING		
STANDARD CONSTRUCTION DETAILS PAVING		
TYPICAL CROSSING LAYOUTS		
APPROVED:		
DATE: SEPTEMBER 2013	REVISED:	Page 6

TYPE 1

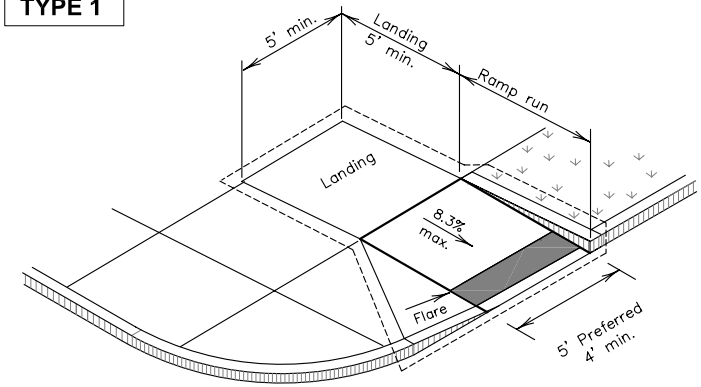

PERPENDICULAR CURB RAMP

TYPE 2

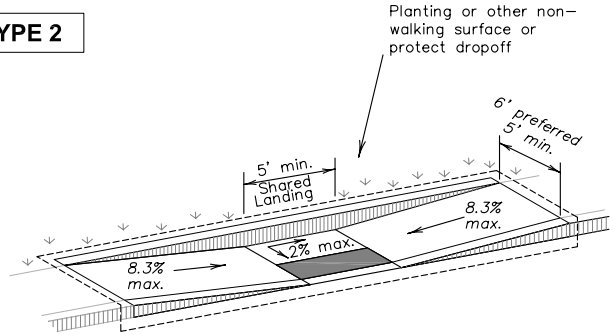

PARALLEL CURB RAMP

(Use only where water will not pond in the landing.)

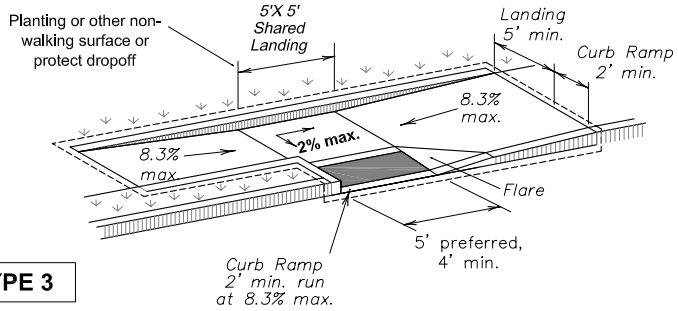

TYPE 3

TYPE 5

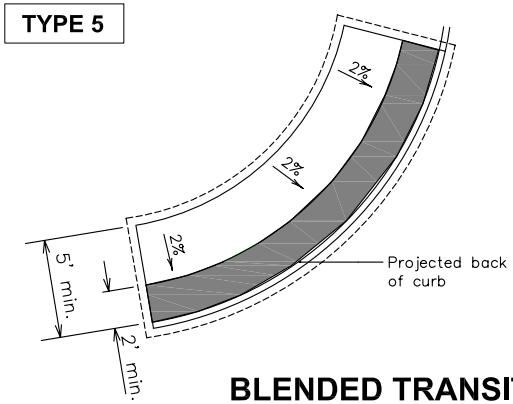

BLENDED TRANSITION

CITY OF SACHSE, TEXAS DEPARTMENT OF ENGINEERING		
STANDARD CONSTRUCTION DETAILS PAVING		
BARRIER FREE RAMP LAYOUTS		
APPROVED:		
DATE: SEPTEMBER 2013	REVISED:	Page 7

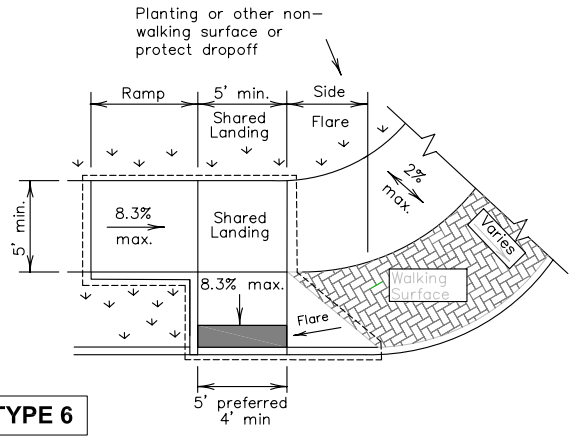

TYPE 6

COMBINATION CURB RAMPS

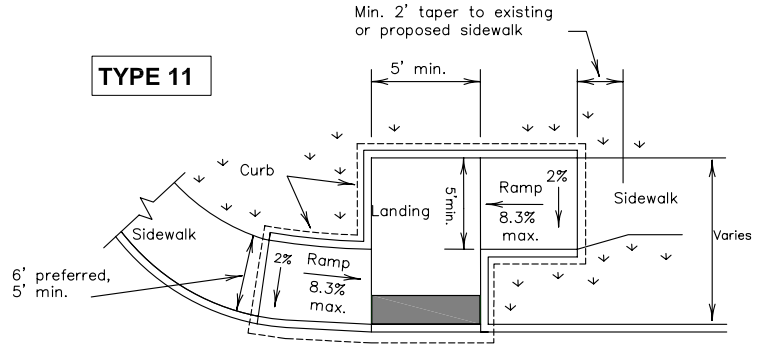

TYPE 11

OFFSET PARALLEL CURB RAMP

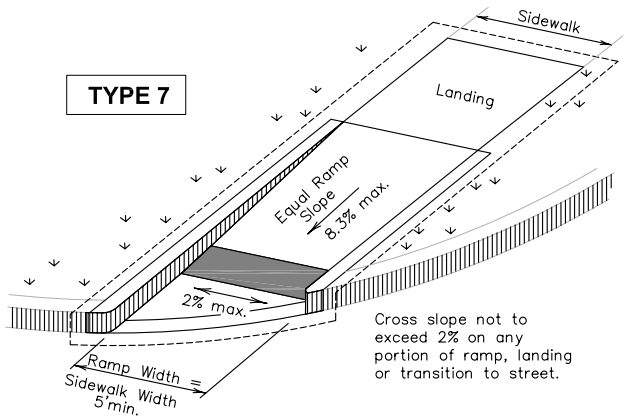

TYPE 7

(Sidewalk set back from curb)

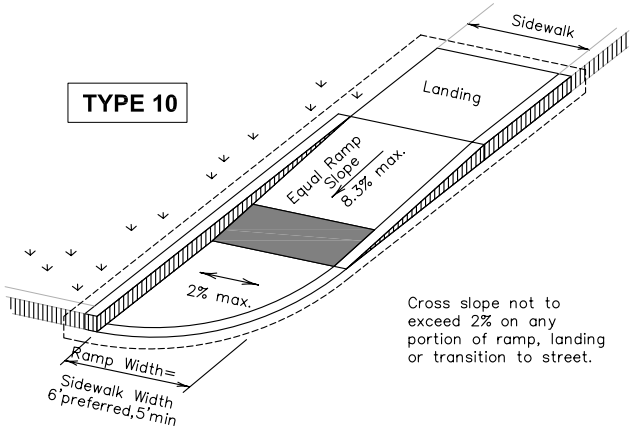

TYPE 10

(Sidewalk adjacent to curb)

DIRECTIONAL RAMPS WITHIN RADIUS

CITY OF SACHSE, TEXAS DEPARTMENT OF ENGINEERING		
STANDARD CONSTRUCTION DETAILS PAVING		
BARRIER FREE RAMP LAYOUTS		
APPROVED:		
DATE: SEPTEMBER 2013	REVISED:	Page 8

TYPE 20

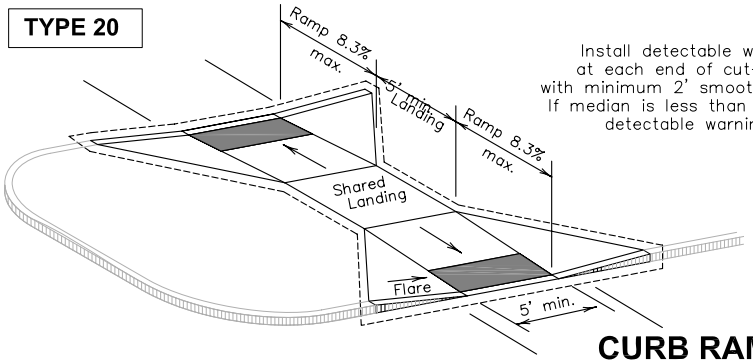

Install detectable warning surface at each end of cut-through ramp with minimum 2' smooth surface between. If median is less than 6' wide, eliminate detectable warning surfaces.

TYPE 21

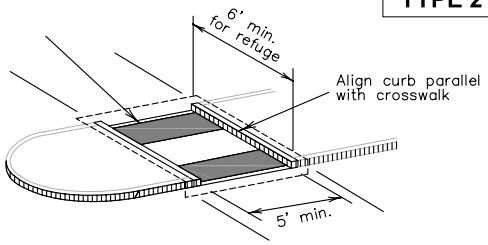

Curb details are shown elsewhere in the plans.

CURB RAMPS AT MEDIAN ISLANDS

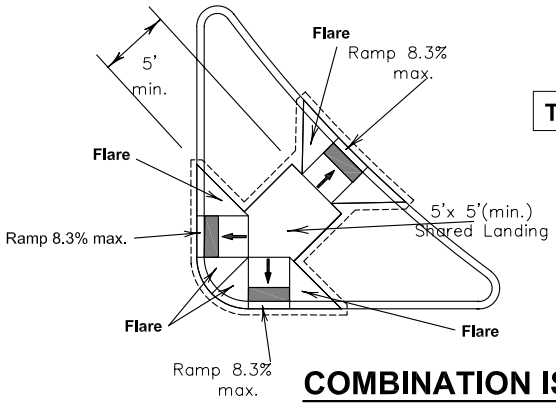

TYPE 22

COMBINATION ISLAND RAMPS

CITY OF SACHSE, TEXAS DEPARTMENT OF ENGINEERING		
STANDARD CONSTRUCTION DETAILS PAVING		
BARRIER FREE RAMP LAYOUTS & PAVER WARNING LAYOUT		
APPROVED:		
DATE: SEPTEMBER 2013	REVISED:	Page 9

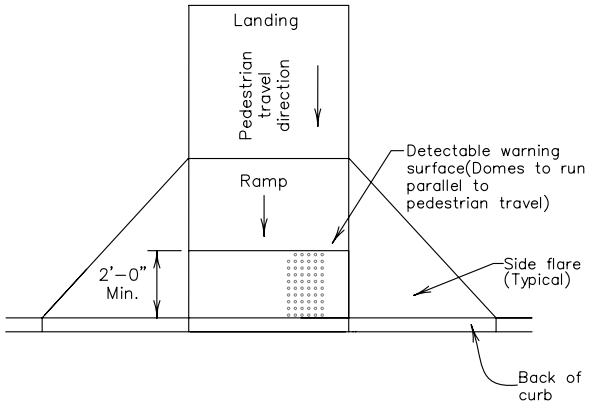

ing ramp run.

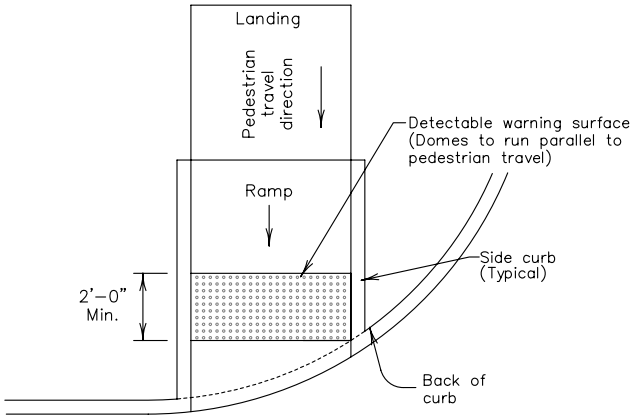

DIRECTIONAL CURB RAMP

Typical placement of detectable warning surface on sloping ramp run.

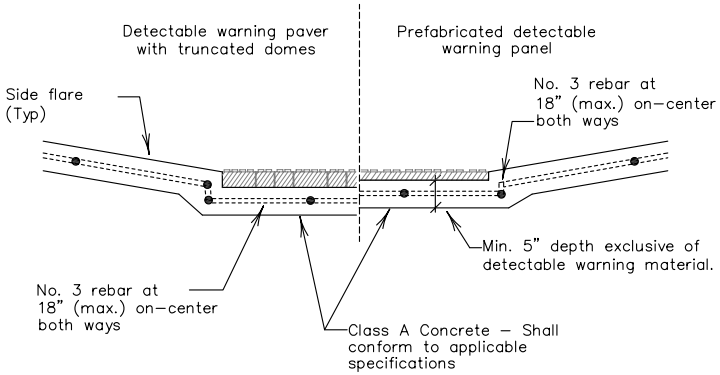

SECTION: CURB RAMP AT DETECTABLE WARNING

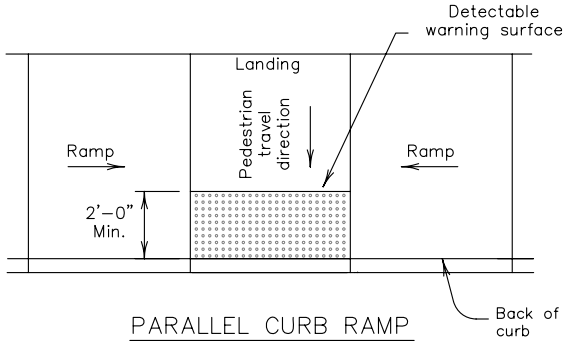

PARALLEL CURB RAMP

Typical placement of detectable warning surface on landing at street edge.

DETECTABLE WARNINGS

CITY OF SACHSE, TEXAS DEPARTMENT OF ENGINEERING		
STANDARD CONSTRUCTION DETAILS PAVING		
SIDEWALKS & BARRIER FREE RAMP		
APPROVED:		
DATE: SEPTEMBER 2013	REVISED:	Page 10

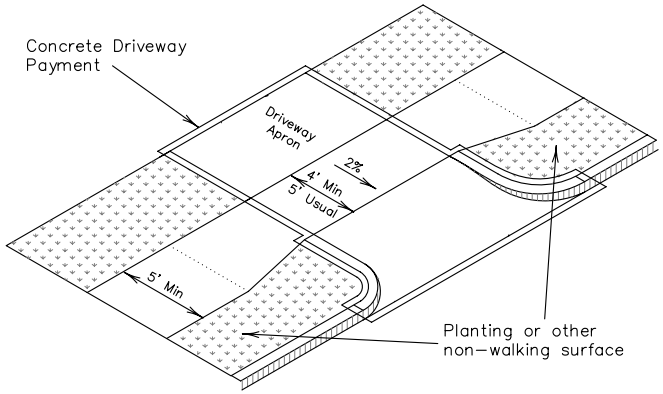

Setback sidewalk

Apron offset sidewalk

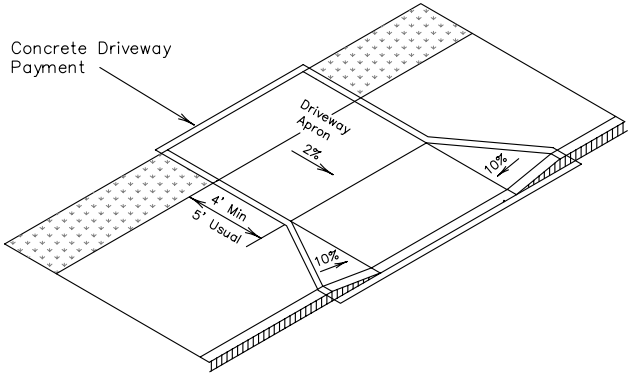

Wide sidewalk

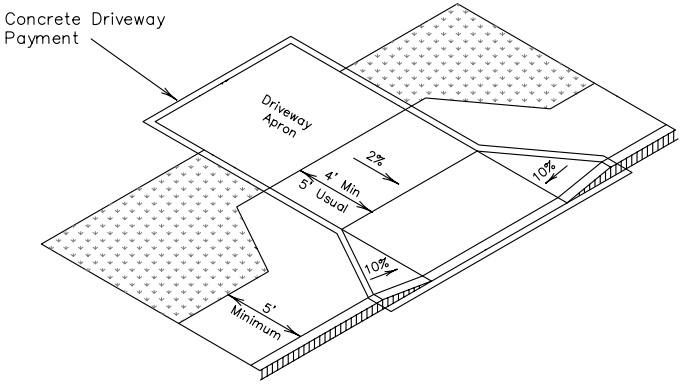

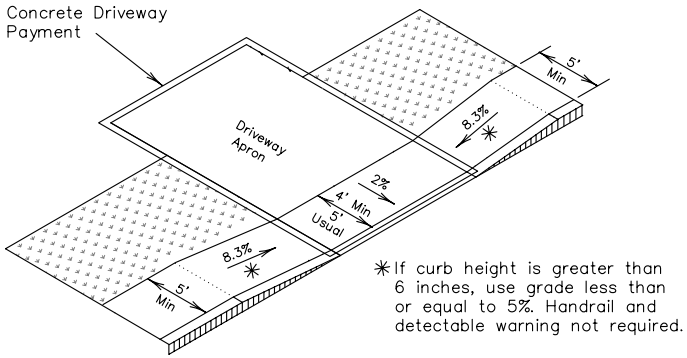

Ramp sidewalk

SIDEWALK TREATMENT AT DRIVEWAYS

CITY OF SACHSE, TEXAS DEPARTMENT OF ENGINEERING		
STANDARD CONSTRUCTION DETAILS PAVING		
SIDEWALKS & BARRIER FREE RAMP		
APPROVED:		
DATE: SEPTEMBER 2013	REVISED:	Page 11

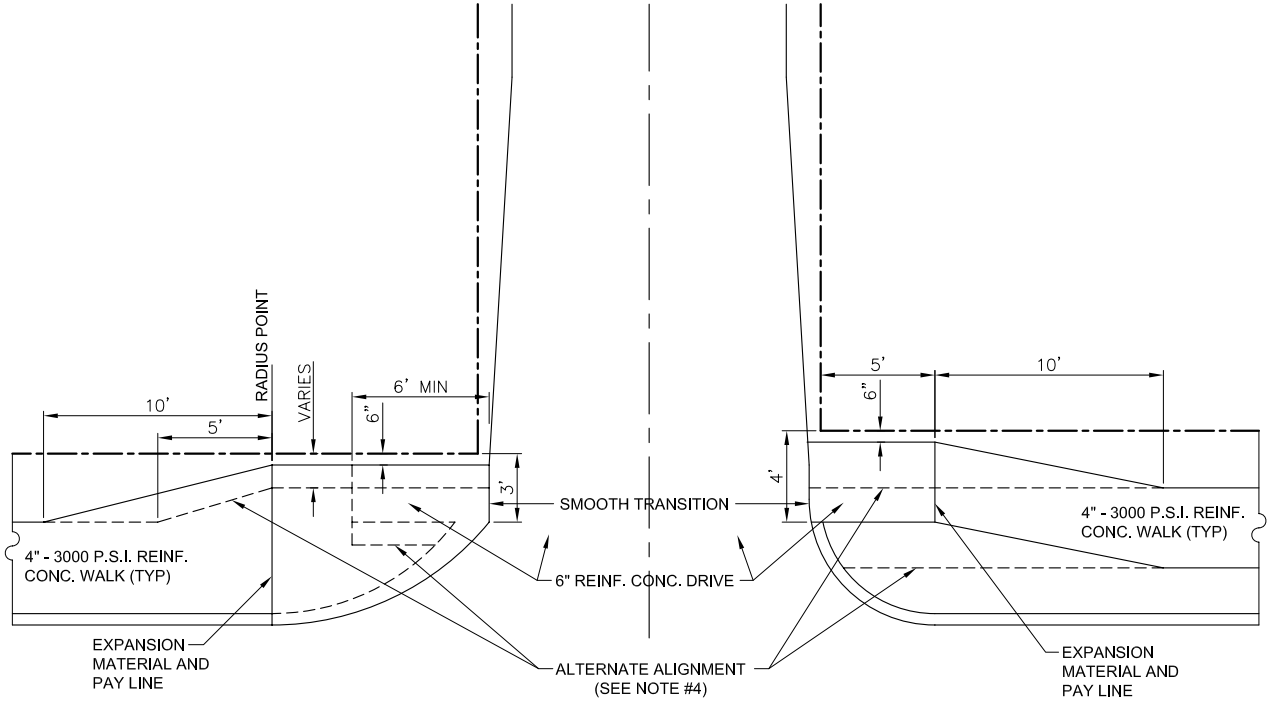

BARRIER FREE RAMPS AT ALLEYS

CITY OF SACHSE, TEXAS DEPARTMENT OF ENGINEERING		
STANDARD CONSTRUCTION DETAILS PAVING		
SIDEWALKS & BARRIER FREE RAMP		
APPROVED:		
DATE: SEPTEMBER 2013	REVISED:	Page 12

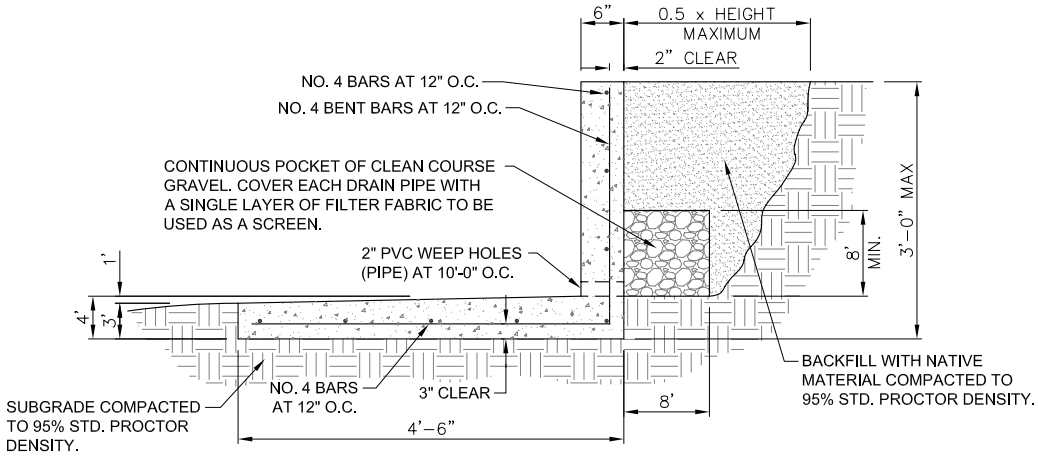

RETAINING WALL WITH INTEGRAL SIDEWALK DETAIL

NOTES

1. ALL EXPOSED EDGES SHALL HAVE A 3/4 INCH CHAMFER.
2. ALL DISTANCES TO REINFORCING BARS REFER TO CLEAR CONCRETE COVER OF BAR UNLESS NOTED OTHERWISE.
3. MINIMUM BAR LAP IS TO BE FORTY (40) BAR DIAMETERS.
4. MINIMUM GRADE OF REINFORCING STEEL IS TO BE ASTM A615 GRADE 60.
5. MINIMUM COMPRESSIVE DESIGN STRENGTH OF THE CONCRETE SHALL BE 3600 PSI, 6-SACK MIX, AT 28 DAYS.
6. MAXIMUM SPACING OF EXPANSION JOINTS SHALL BE 75'-0" CENTER TO CENTER OR ON LOT LINES.

CITY OF SACHSE, TEXAS DEPARTMENT OF ENGINEERING		
STANDARD CONSTRUCTION DETAILS PAVING		
SIDEWALKS & BARRIER FREE RAMP		
APPROVED:		
DATE: SEPTEMBER 2013	REVISED:	Page 13